ODL, Inc.

"Impact Resistant" Severe Weather® Doorglass

ASSEMBLY FOR GLAZING UP TO A 3'0 x 6'8 SINGLE PANEL

GENERAL NOTES

1. This product has been evaluated and is in compliance with the 9th Edition (2026) Florida Building Code (FBC) structural requirements including the High Velocity Hurricane Zone (HVHZ).
2. When used in the "HVHZ" this product complies with Section 1626 of the Florida Building Code and does not require an impact resistant covering.
3. When used in areas outside of the "HVHZ" requiring wind borne debris protection, this product complies with FBC Sections 1609.1.2 & R301.2.1.2 and does not require an impact resistant covering. This product meets missile level "D" and includes Wind Zone 4 as defined in ASTM E 1996.
4. This product meets the water infiltration requirements for "HVHZ".
5. This product is approved for use as a substitute doorglass assembly in conjunction with a glazed steel or fiberglass side hinged swing door and/or fixed sidelite possessing a comparable current Florida Statewide product approval.
6. The design pressure (DP) rating shall be the lesser of the DP rating shown in this approval or the DP rating shown in the glazed steel or fiberglass side hinged swing door or fixed sidelite approval being used.
7. The door panel and lite opening size shall not exceed the sizes shown in this approval or the glazed steel or fiberglass side hinged swing door or fixed sidelite approval being used.
8. This product has been tested in the door and/or sidelite panels as specified on Sheets 5 & 6 of this approval. Substitution into a similar product may be approved for use by the local Authority Having Jurisdiction. In all cases, the glazed steel or fiberglass door and/or sidelite used must possess a comparable current Florida Statewide product approval.

TABLE OF CONTENTS

SHEET#	DESCRIPTION
1	Typical Elevations, Design Pressures & General Notes
2	Cross Sections & Keystone Frame Profile
3	Glazing Details
4	Glazing Details
5	Fiberglass Door Panel Details
6	Steel Door Panel Details

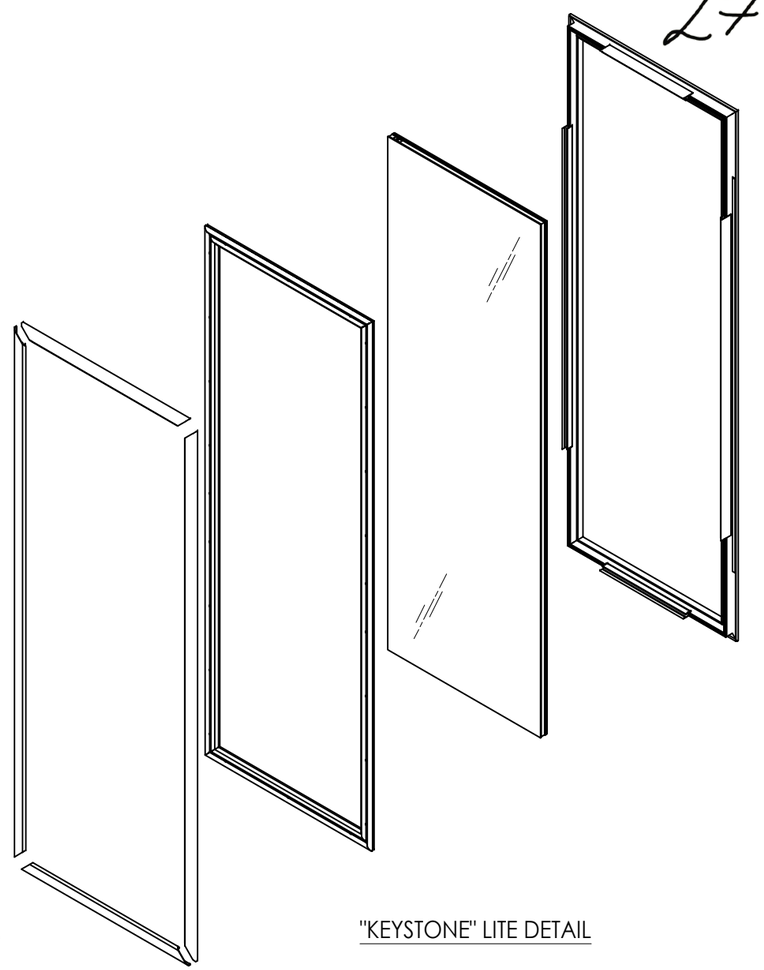

"KEYSTONE" LITE DETAIL

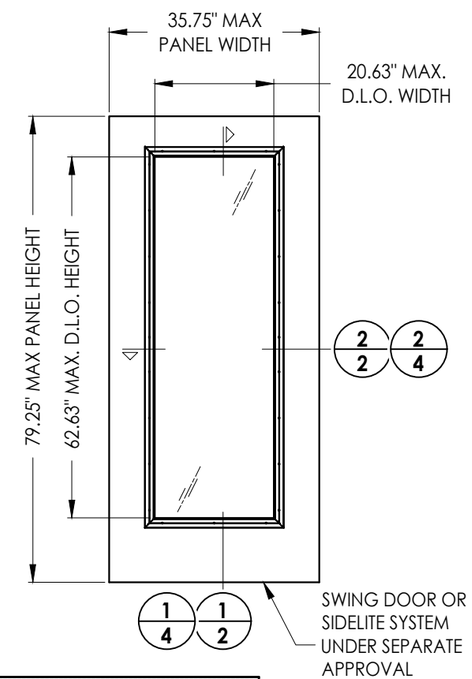

MAX. DESIGN PRESSURE RATING (PSF)

GLAZING TYPE	PROFILE	POSITIVE	NEGATIVE
1" INSULATED LAMINATED GLASS	"KEYSTONE"	+60.0	-60.0
1-1/4" INSULATED LAMINATED GLASS	"KEYSTONE"	+60.0	-60.0

L. F. SCHMIDT LICENSE No. 43409 STATE OF FLORIDA PROFESSIONAL ENGINEER

Digitally signed by Lyndon F Schmidt
Date: 2026.07.20 15:04:48 -04'00'

This item has been digitally signed and sealed by **L. F. Schmidt, P.E.** on the date adjacent to the seal.

Printed copies of this document are not considered signed and sealed and the signature must be verified on any electronic copies.

THIS PRODUCT APPROVAL IS VALID ONLY FOR THE STATE OF FLORIDA

Documents Prepared By:
Lyndon F. Schmidt
P.E. No. 43409

RW BUILDING CONSULTANTS, INC.
P.O. Box 230, Valrico, FL 33595
Phone No.: 813.659.9197
FBPE Registry No. 9813

PRODUCT: ODL LITE FRAME

PART OR ASSEMBLY: TYPICAL ELEVATIONS, DESIGN PRESSURES & GENERAL NOTES

REVISIONS

NO.	DATE		BY
2	7/01/26	UPDATE TO 9TH ED. (2026) FBC	LFS
1	4/11/24	ADD ADDITIONAL DOOR PANELS	LFS

DATE: 10/16/23
SCALE: N.T.S.
DWG. BY: LFS
CHK. BY: RW
DRAWING NO.: FL-14935.7
SHEET 1 OF 6

© 2023 R.W. BUILDING CONSULTANTS INC.

Z:\2023 FBC Drawings\ODL, Inc\FL-14935 R12\FL-14935.7.dwg

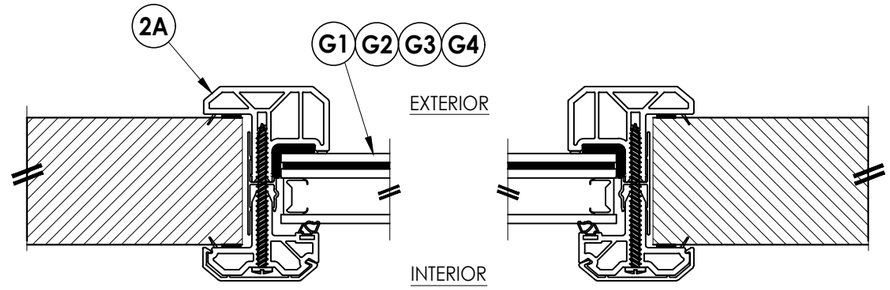

2/2 HORIZONTAL CROSS SECTION

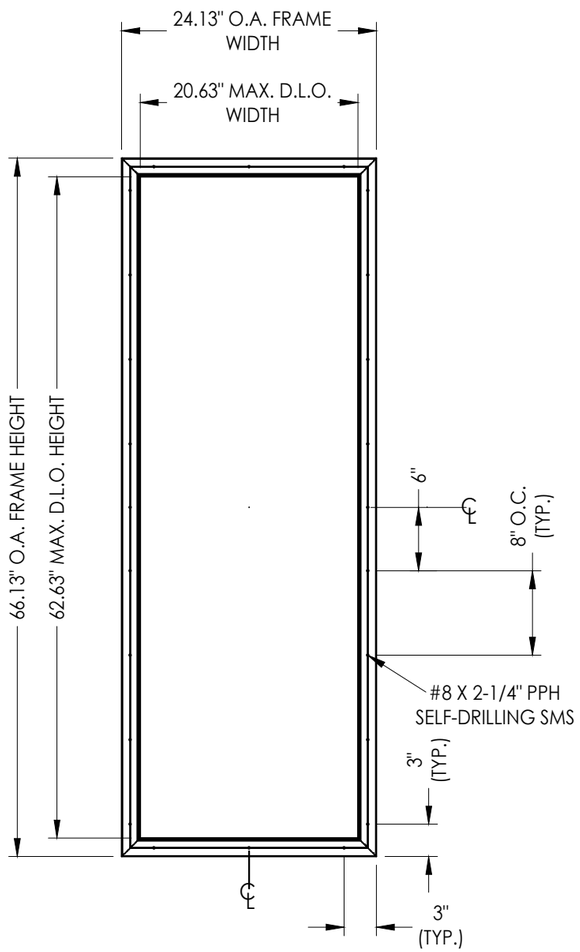

ODL 6'-8" IMPACT PVC LITE FRAME
"KEYSTONE"

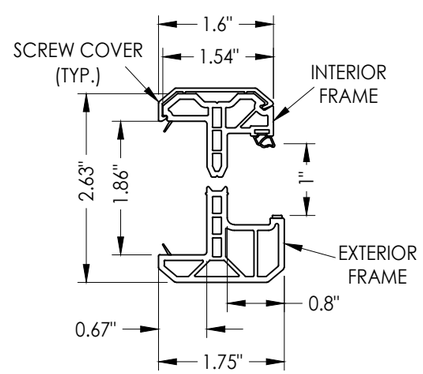

2A ODL KEYSTONE PVC LITE FRAME
1" GLAZING

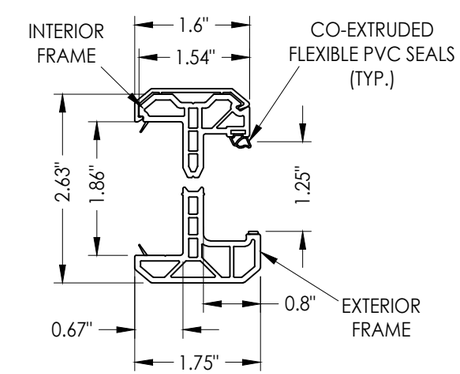

2B ODL KEYSTONE PVC LITE FRAME
1-1/4" GLAZING

ODL LITE FRAME CROSS SECTIONS
"Keystone" Profile
(See Sheet 4 for operable & fixed blind cross sections)

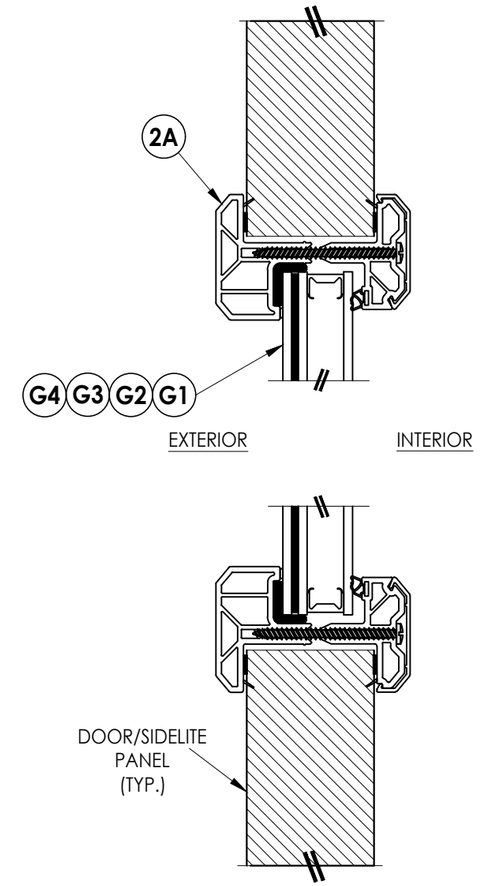

1/2 VERTICAL CROSS SECTION

Documents Prepared By:
Lyndon F. Schmidt
P.E. No. 43409
RW BUILDING CONSULTANTS, INC.
P.O. Box 230, Valrico, FL 33595
Phone No.: 813.659.9197
FBPE Registry No. 9813

PRODUCT: ODL LITE FRAME

PART OR ASSEMBLY: CROSS SECTIONS & KEYSTONE FRAME PROFILE

REVISIONS

NO.	DATE		BY
2	7/01/26	UPDATE TO 9TH ED. (2026) FBC	LFS
1	4/11/24	ADD ADDITIONAL DOOR PANELS	LFS

DATE: 10/16/23
SCALE: N.T.S.
DWG. BY: LFS
CHK. BY: RW
DRAWING NO.: FL-14935.7
SHEET 2 OF 6

© 2023 R.W. BUILDING CONSULTANTS INC.

Z:\2023 FBC Drawings\ODL, Inc\FL-14935 R12\FL-14935.7.dwg

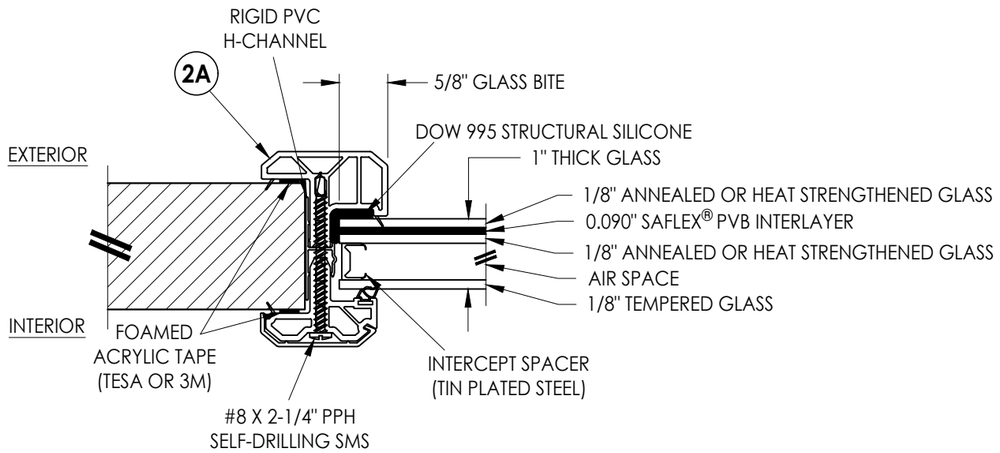

G1 GLAZING DETAIL
INTERCEPT SPACER

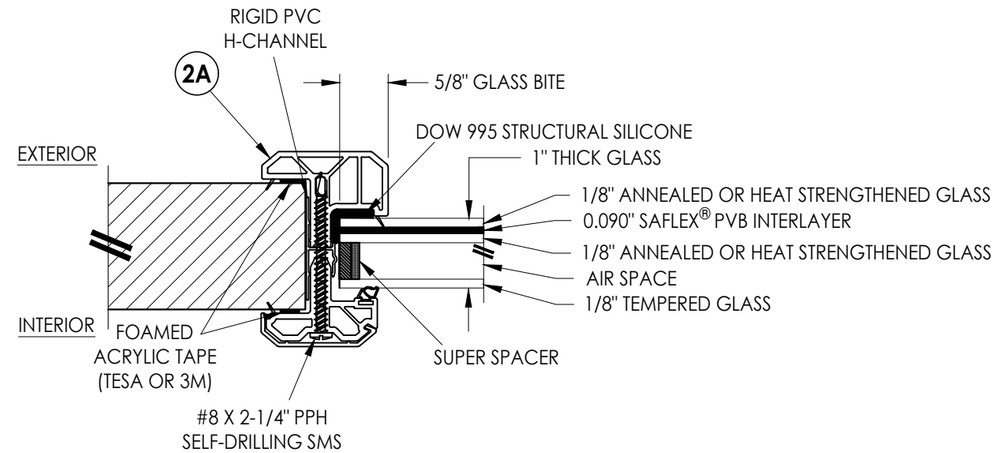

G2 GLAZING DETAIL
SUPER SPACER

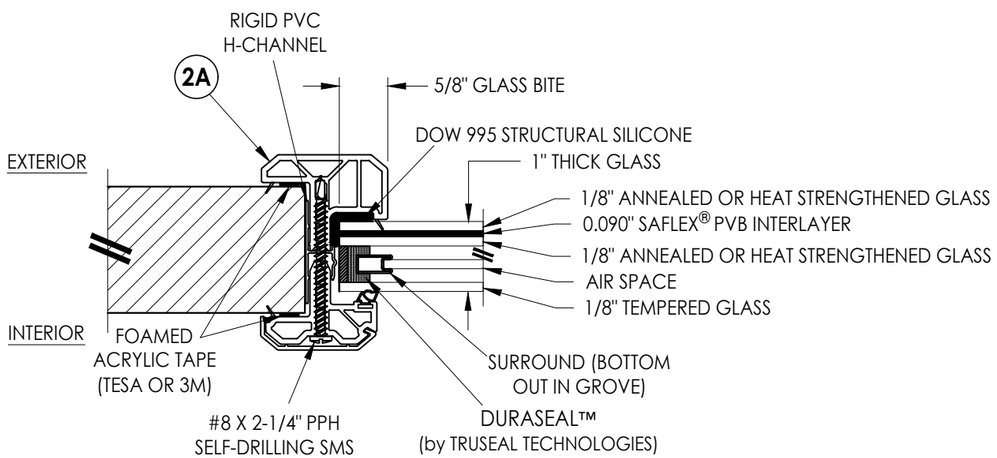

G3 GLAZING DETAIL
DECOSEAL

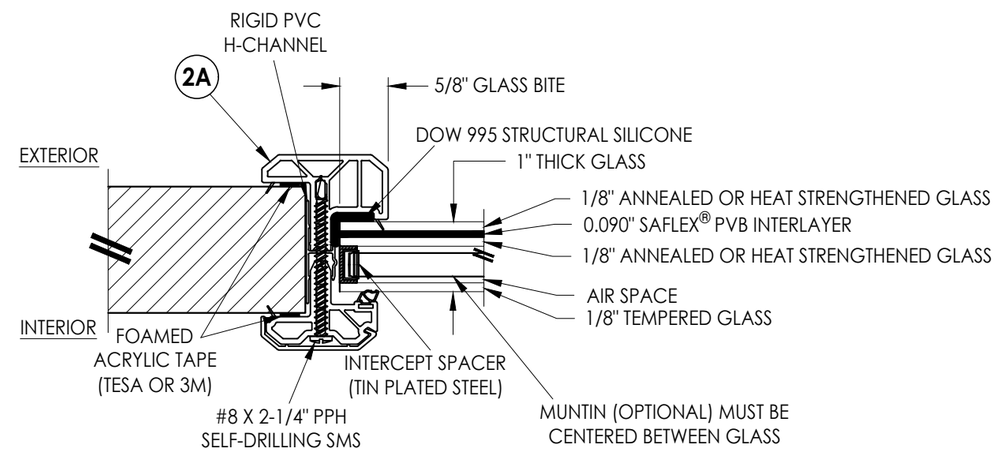

G4 GLAZING DETAIL
INTERCEPT SPACER
w/ OPTIONAL MUNTIN

Documents Prepared By:
Lyndon F. Schmidt
P.E. No. 43409
RW BUILDING CONSULTANTS, INC.
P.O. Box 230, Valrico, FL 33595
Phone No.: 813.659.9197
FBPE Registry No. 9813

PRODUCT: ODL LITE FRAME

PART OR ASSEMBLY: GLAZING DETAILS

REVISIONS

NO.	DATE	BY
2	7/01/26	UPDATE TO 9TH ED. (2026) FBC	LFS
1	4/11/24	ADD ADDITIONAL DOOR PANELS	LFS

DATE: 10/16/23
SCALE: N.T.S.
DWG. BY: LFS
CHK. BY: RW
DRAWING NO.: FL-14935.7
SHEET 3 OF 6

© 2023 R.W. Building Consultants Inc.

Z:\2023 FBC Drawings\ODL, Inc\FL-14935 R12\FL-14935.7.dwg

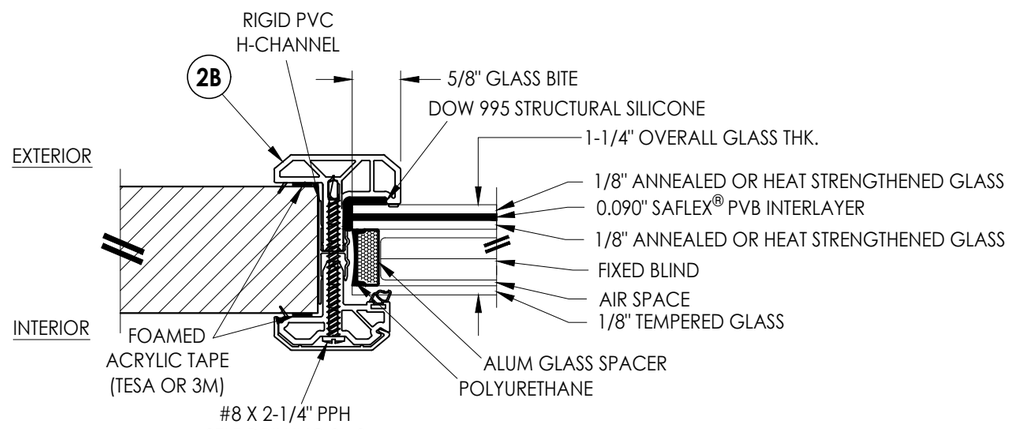

G5 GLAZING DETAIL
ALUM SPACER w/ FIXED BLIND

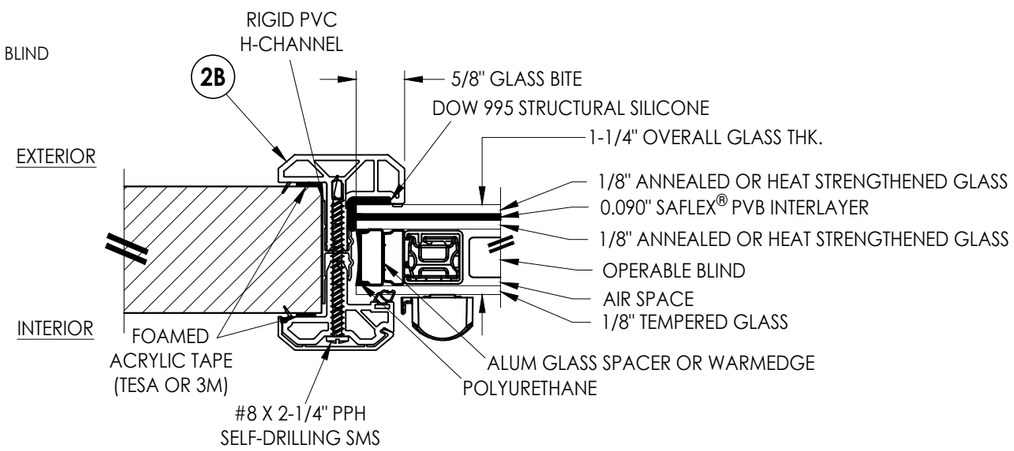

G6 GLAZING DETAIL
ALUM SPACER w/ OPERABLE BLIND

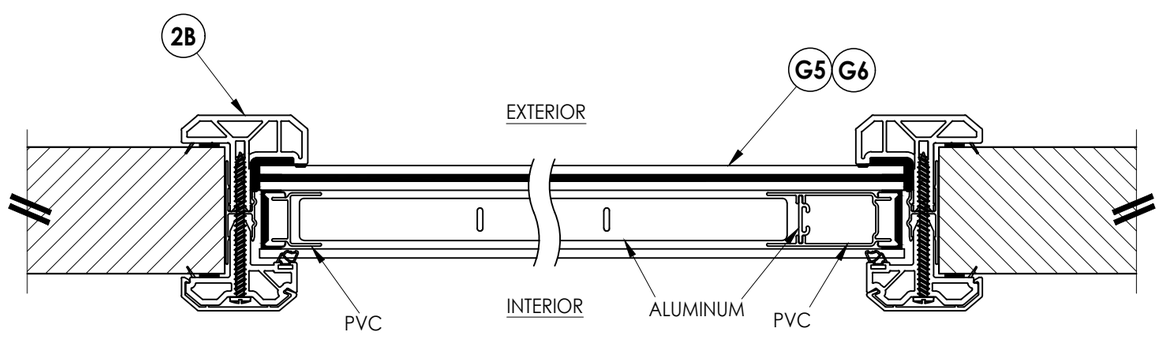

2/4 HORIZONTAL CROSS SECTION
WARMEDGE OPERABLE BLIND
NOTE: FIXED BLIND NOT SHOWN

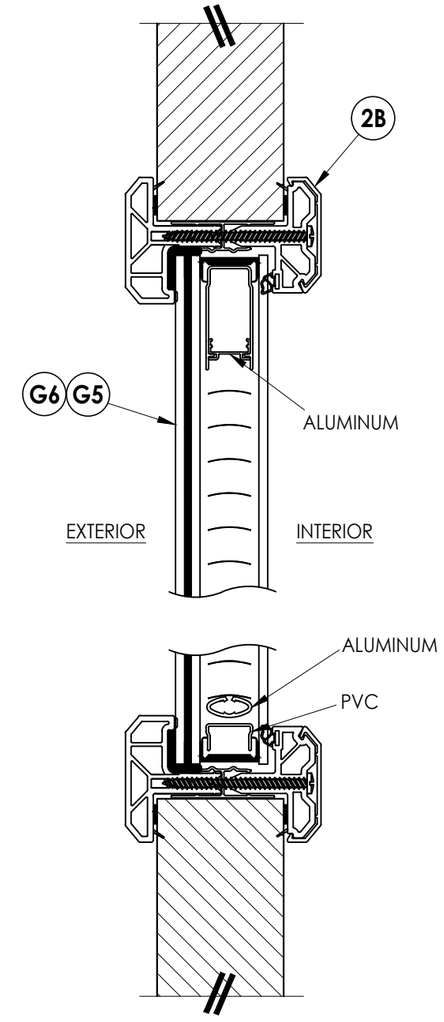

1/4 VERTICAL CROSS SECTION
WARMEDGE OPERABLE BLIND

Documents Prepared By:
Lyndon F. Schmidt
P.E. No. 43409
RW BUILDING CONSULTANTS, INC.
P.O. Box 230, Valrico, FL 33595
Phone No.: 813.659.9197
FBPE Registry No. 9813

PRODUCT: ODL LITE FRAME
PART OR ASSEMBLY: GLAZING DETAILS

REVISIONS

NO.	DATE		BY
2	7/01/26	UPDATE TO 9TH ED. (2026) FBC	LFS
1	4/11/24	ADD ADDITIONAL DOOR PANELS	LFS

DATE: 10/16/23
SCALE: N.T.S.
DWG. BY: LFS
CHK. BY: RW
DRAWING NO.: FL-14935.7
SHEET 4 OF 6

© 2023 R.W. BUILDING CONSULTANTS INC.

Z:\2023 FBC Drawings\ODL, Inc\FL-14935 R12\FL-14935.7.dwg

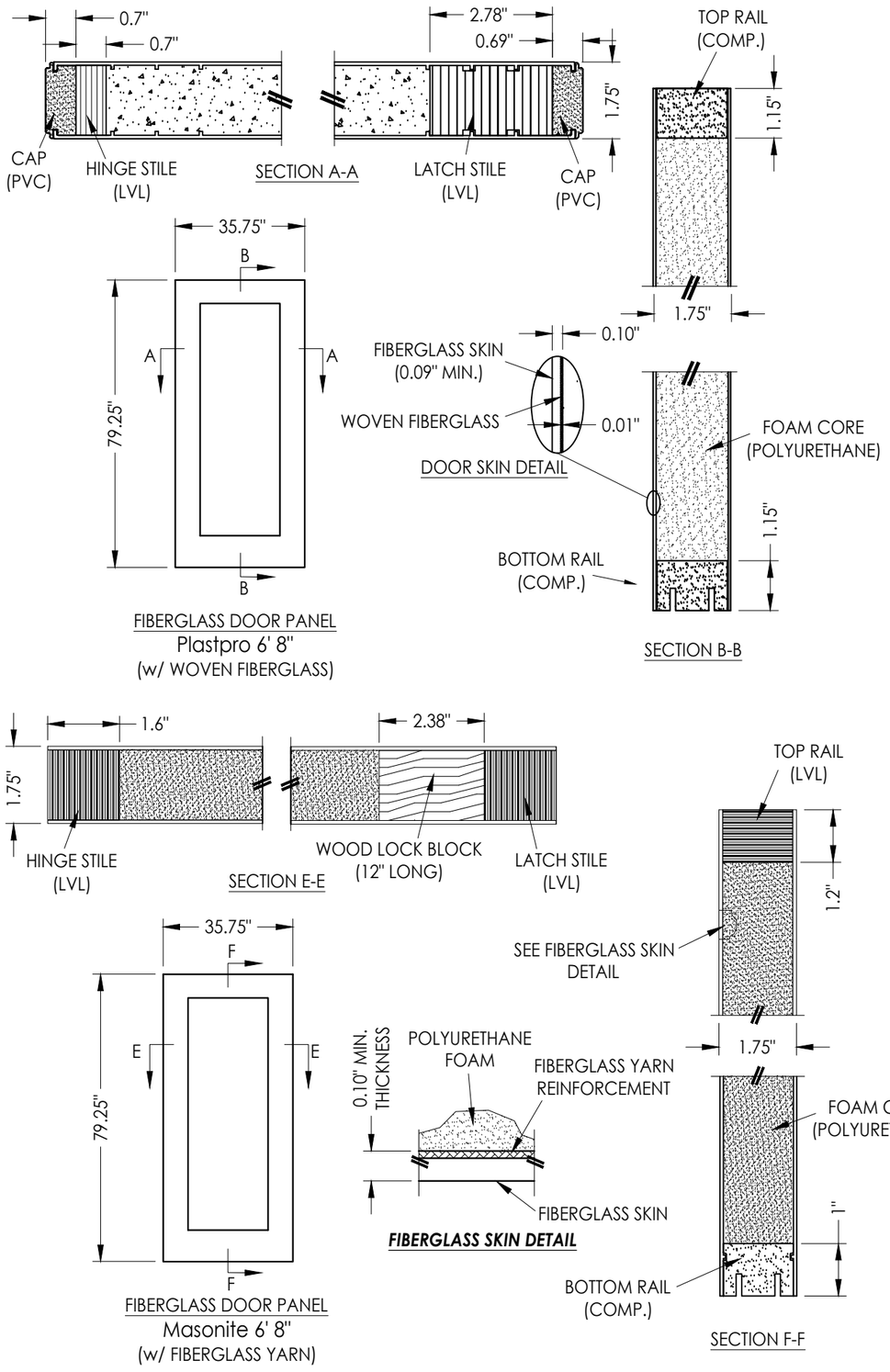

NOTE: SEE GENERAL NOTE 6, SHEET 1 FOR DESIGN PRESSURE LIMITATIONS

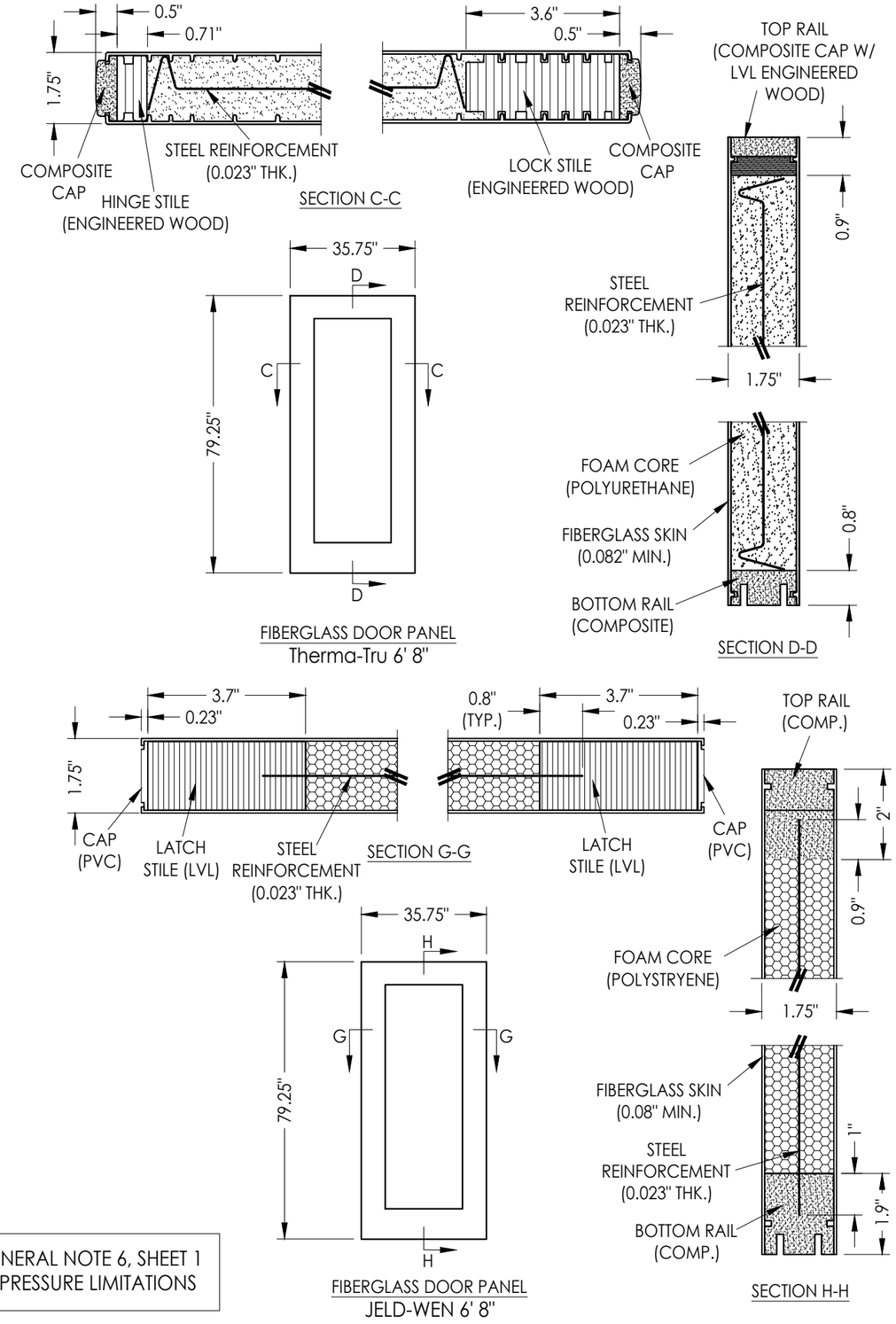

Documents Prepared By:
Lyndon F. Schmidt
P.E. No. 43409

RW BUILDING CONSULTANTS, INC.
P.O. Box 230, Valrico, FL 33595
Phone No.: 813.659.9197
FBPE Registry No. 9813

PRODUCT: ODL LITE FRAME

PART OR ASSEMBLY: FIBERGLASS DOOR PANEL DETAILS

REVISIONS

NO.	DATE		BY
2	7/01/26	UPDATE TO 9TH ED. (2026) FBC	LFS
1	4/11/24	ADD ADDITIONAL DOOR PANELS	LFS

DATE: 10/16/23
SCALE: N.T.S.
DWG. BY: LFS
CHK. BY: RW
DRAWING NO.: FL-14935.7
SHEET 5 OF 6

© 2023 R.W. BUILDING CONSULTANTS INC.

Z:\2023 FBC Drawings\ODL Inc\FL-14935 R12\FL-14935.7.dwg

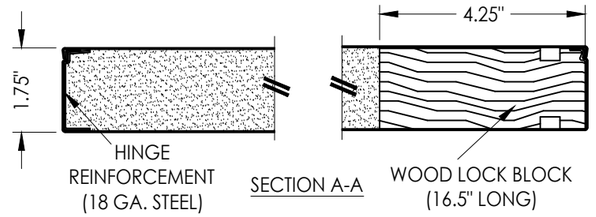

SECTION A-A

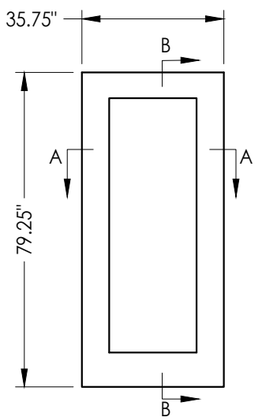

STEEL DOOR PANEL
Taylor 6' 8"

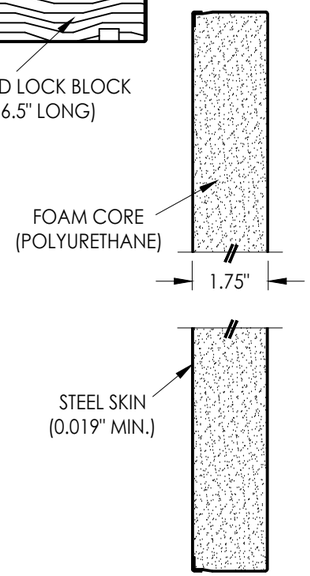

SECTION B-B

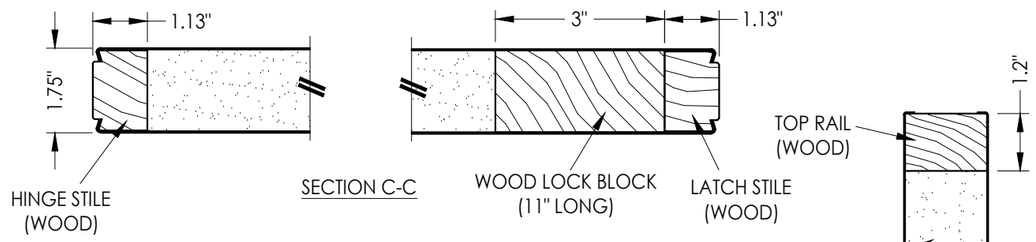

SECTION C-C

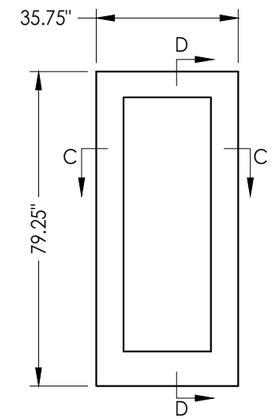

STEEL DOOR PANEL
Taylor 6' 8"

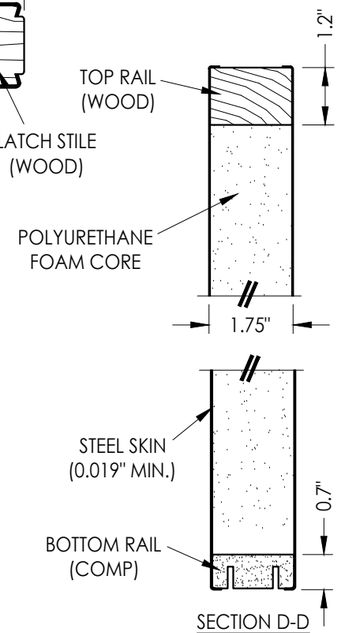

SECTION D-D

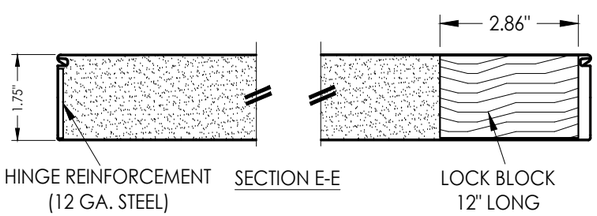

SECTION E-E

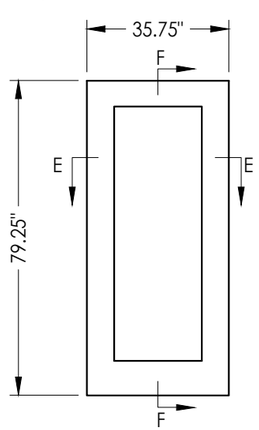

STEEL DOOR PANEL
Masonite 6' 8"

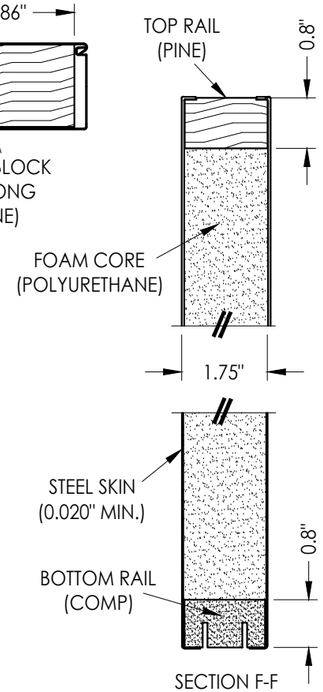

SECTION F-F

NOTE: SEE GENERAL NOTE 6, SHEET 1
FOR DESIGN PRESSURE LIMITATIONS

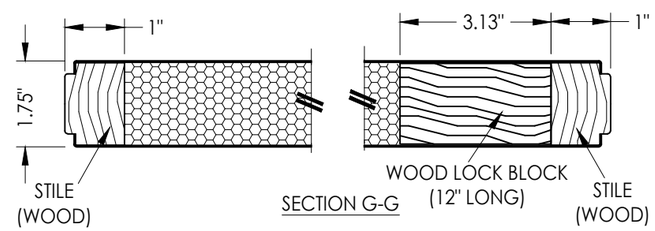

SECTION G-G

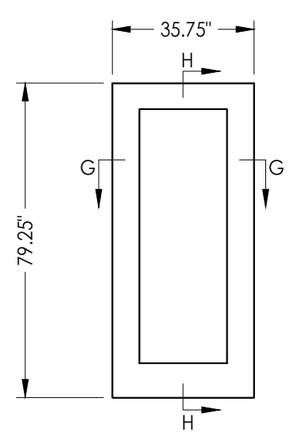

STEEL DOOR PANEL
JELD-WEN 6' 8"

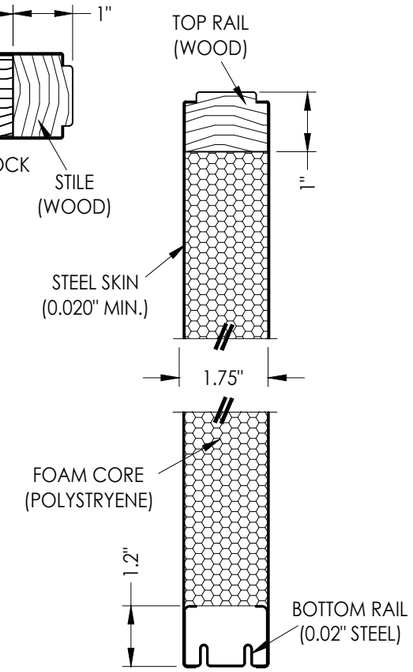

SECTION H-H

Documents Prepared By:
Lyndon F. Schmidt
P.E. No. 43409

RW BUILDING CONSULTANTS, INC.
P.O. Box 230, Valrico, FL 33595
Phone No.: 813.659.9197
FBPE Registry No. 9813

PRODUCT: ODL LITE FRAME

PART OR ASSEMBLY: STEEL DOOR PANEL DETAILS

NO.	DATE	REVISIONS	BY
2	7/01/26	UPDATE TO 9TH ED. (2026) FBC	LFS
1	4/11/24	ADD ADDITIONAL DOOR PANELS	LFS

DATE: 10/16/23
SCALE: N.T.S.
DWG. BY: LFS
CHK. BY: RW
DRAWING NO.: FL-14935.7
SHEET 6 OF 6

© 2023 R.W. Building Consultants Inc.

Z:\2023 FBC Drawings\ODL, Inc\FL-14935 R12\FL-14935.7.dwg